P13000i

EQUAL POWER



FEATURES

- Inverter technology: stable power for safe operation of sensitive electronics.
- Dual voltage
- Differential protection
- Economy mode automatically adjusts the engine speed to the optimum level to provide excellent fuel economy and noise reduction.
- Compact and transportable by handle



POWERRUSH*

Powerrush increases electrical current upon demand, above rated output when starting electric motors. (*Up to 16 kW)

EQUAL POWER

Ensure same power output in monophase and threephase operations.

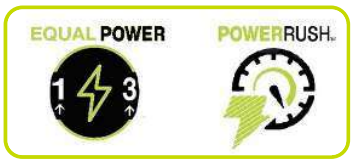

2 WIRE START Connection

The two-wire start system is a simple and efficient way for powering and controlling a generator without the need for additional components. It enables generator start and stop operations through the opening and closing of a relay, either manually or via an inverter that detects a deficiency primary energy source.

PERFORMANCE		
Frequency	Hz	50
Voltage	V	400/230
Phase		3 / 1
Max Power	watt	13000
Rated Power	watt	12000



www.pramac.com

Engine		
Engine Brand		Pramac
Type		OHV
Exhaust emission level		Stage V
Operating Speed Nominal	rpm	Variable
Fuel		Petrol
Starting Systems		Electric
Oil capacity	l	1.7
Low Oil Shutdown		√

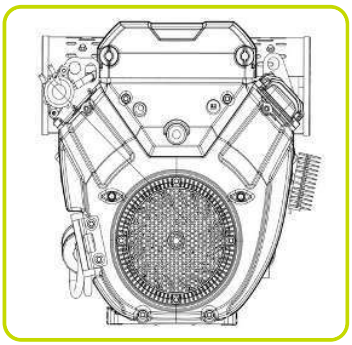

Alternator Specifications	
Voltage regulation system	Inverter

Dimensional data		
Length	(L) mm	972
Width	(W) mm	783
Height	(H) mm	873
Dry weight	kg	195
Carton box dimension LxWxH	mm	1090x820x900

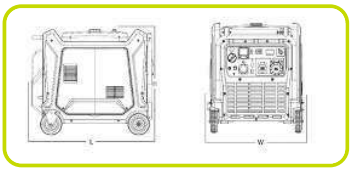

Autonomy		
Fuel tank capacity	l	45
Fuel consumption 75%	l/h	6
Running time 75%	h	7.5



Noise level		
Guaranteed noise level (LWA)	dB(A)	96
Noise pressure level @ 7 m	dB(A)	65

GENSET CONTROL

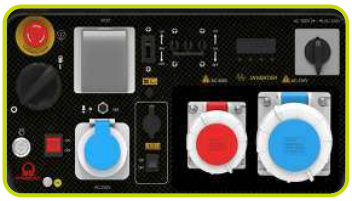

COMMANDS / INSTRUMENTATION
- Selector switch: O/I | Power Button
- Mono/Three phase Switch + Equal function
- Two Wire Auto Connectivity +Remote control
- Battery charging port 12V
- Voltmeter / Hourmeter / Frequency meter / Fuel Gauge
- Emergency stop button

PROTECTIONS
- RCD protection
- AC thermal cicuit breaker (3)

SOCKET TYPE

SCHUKO 230V 16A IP67	1
2P+T CEE 230V 63A IP67	1
3P+N+T CEE 400V 32A IP67	1

The information is aligned with the Data file at the time of download.
Printed on 28/05/2026 (ID 205402)

©2026 | PR Industrial S.r.l. – Loc. Il Piano – 53031 Casole d'Elsa (SI) – ITALY. Company subject to the management and coordination of Generac Power Systems Inc.| All rights reserved | Image shown may not reflect actual package. Specifications subject to change without notice

www.pramac.com